RevNo	Revision note	Date	Signature	Checked
00	Sketch Only			

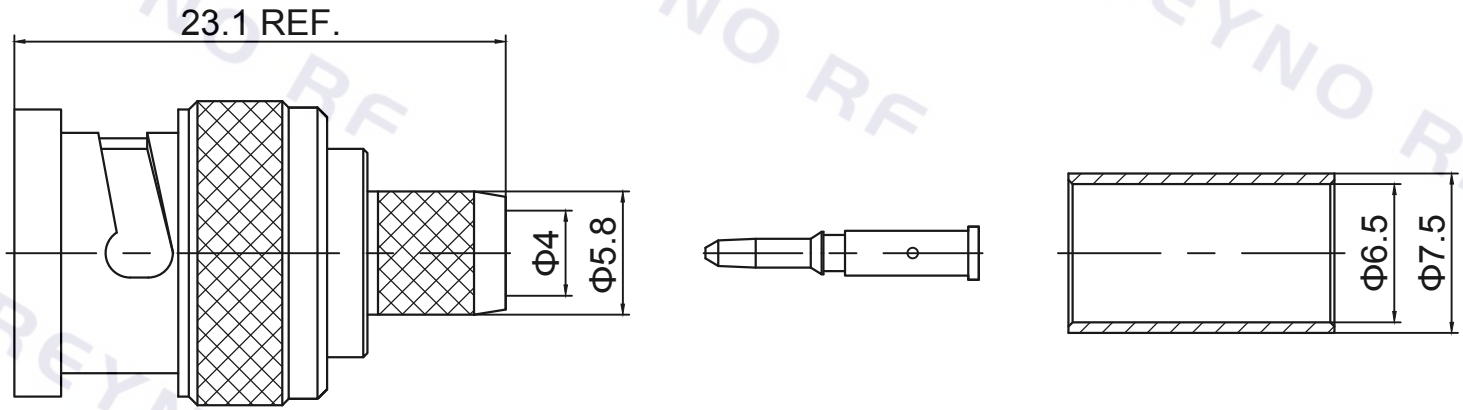

Material & Finishing:

1. Center conductor:Brass, Gold Plating
2. Insulators: PTFE
3. Body : Brass, Nickel Plating
4. Other Metal Parts:Crimp Ferrule:Brass,Nickel Plating
   Nut:Brass,Nickel Plating

Electrical Data:

1. Impedance: 75 Ohms
2. VSWR:≤1.2（0～3GHz）

RoHS Compliant.

ALL DIMENSIONS ARE IN MILLIMETERS AND [INCHES]

Unit:mm

UNLESS OTHERWISE NOTED
ALL SURFACES FINISHED TO 64 MAX.

ALL TOLERANCES ARE:

DECIMALS	FRACTIONS	ANGLES
x ± 1.0	±1/64	x° ± 1°
x.x ± 0.5	x.xx ± 0.1	x°x' ± 0.5'

THESE DRAWING & SPEC. ARE THE PROPERTY OF LEILUO RF AND SHALL NOT BE REPRODUCED, OR COPIED OR USED AS THE BASIS FOR THE MANUFACTURE OR SALE OF APPARATUS OR DEVICES WITHOUT THEIR EXPRESS WRITTEN CONSENT.

雷珞电子 REYNO RF

Title: BNC MALE CRIMP FOR RG59 CABLE 75Ω

Drawn by	Ckd by	Appd by	Date

Scale	Sheet	
5:1	Sheet 1 of 1	3650064-1