RevNo	Revision note	Date	Signature	Checked
00	Sketch Only			

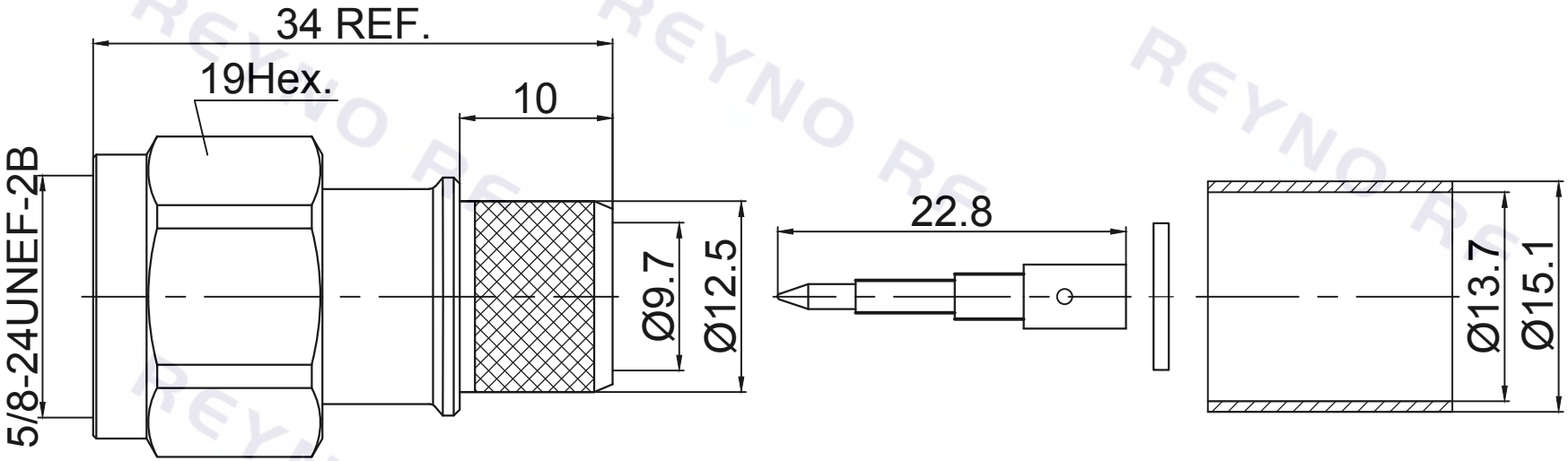

Material & Finishing:
1. Center conductor:Brass, Silver Plating
2. Insulators: PTFE
3. Body : Brass,Ternary Alloy Plating
4. Other Metal Parts:Brass,Nickel Plating
   Brass,Nickel Plating
5. Gasket: Silicone Rubber

Electrical Data:
1. Impedance: 50 Ohms
2. Frequency: 0~6GHz
3. VSWR: ≤1.15(0~3GHz)

RoHS Compliant.

ALL DIMENSIONS ARE IN MILLIMETERS AND [INCHES]

Unit:mm

UNLESS OTHERWISE NOTED
ALL SURFACES FINISHED TO 64 MAX.

ALL TOLERANCES ARE:

DECIMALS	FRACTIONS	ANGLES
x ± 1.0	±1/64	x° ± 1°
x.x ± 0.5	x.xx ± 0.1	x°x' ± 0.5'

雷珞电子 REYNO RF

THESE DRAWING & SPEC. ARE THE PROPERTY OF LEILUO RF AND SHALL NOT BE REPRODUCED, OR COPIED OR USED AS THE BASIS FOR THE MANUFACTURE OR SALE OF APPARATUS OR DEVICES WITHOUT THEIR EXPRESS WRITTEN CONSENT.

Title: N MALE CRIMP FOR LMR500 CABLE

Drawn by	Ckd by	Appd by	Date

Scale	Sheet	
5:1	Sheet 1 of 1	3650787

REYNO RF